# BATON ROUGE

## ThermOne shower system

## #91523

Last revision : 03/05/2018

Products and specifications shown are subject to change without notice. Please contact our technical support at tech@alt-aqua.com for any further queries, replacement part requests, etc. alt-aqua.com

AQUABRASS

# ThermOne valve rough

ALT PROGETTO AQUA

## FEATURES

Solid brass
Service check valves / stop valves
Thermostatically limited to within 42° C

Flow rate: 4.5gpm (17L/min) at 45psi

## WARRANTY

Residential: Limited lifetime warranty to original purchaser
Commercial: Two years warranty
(Complete warranty available at www.aquabrass.com/warranty)

**61234 NPT CONNECTION**

- 1/2" male water inlets - NPT/sweat
- 1/2" male water outlets - NPT/sweat

**61236 PEX CONNECTION**

- PEX water inlets and top outlet
- 1/2" male bottom water outlet - NPT/sweat

**61238 WB CONNECTION**

- WB water inlets and top outlet
- 1/2" male botton water outlet - NPT/sweat

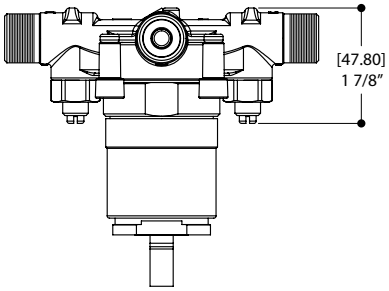


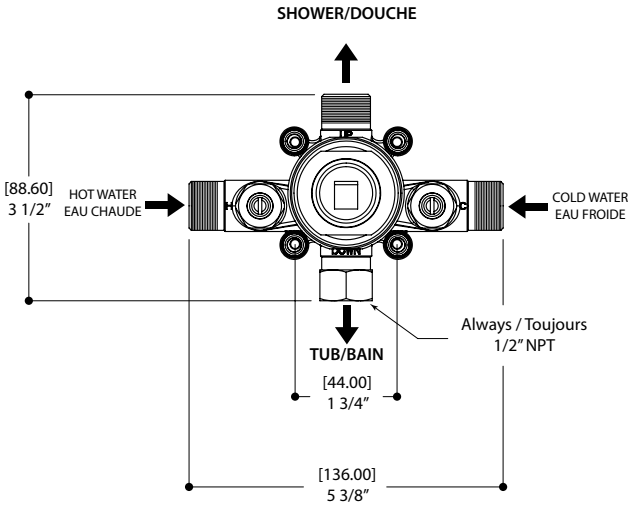


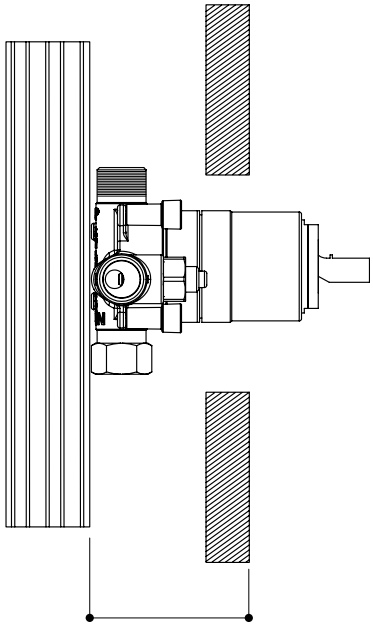


Products and specifications shown are subject to change without notice. Please contact our technical support at tech@aquabrass.com for any further queries, replacement parts requests etc.

# BATON ROUGE
# #25231

ThermOne trim kit for #61234 - #61236 - #61238

## FEATURES

Thermostatic cartridge pre-set to never exceed 42°C/108°F
Lift and rotate temperature / volume control using one single lever
THERMO-DRY™ -avoids any risks of hot/cold water cross contamination
Shower valve not included

## FINISH

Polished chrome (pc)

## WARRANTY

Limited lifetime warranty on all cartridges and also on the polished chrome finish. All other components and parts carry a limited five-year warranty.

## CODE & COMPLIANCE

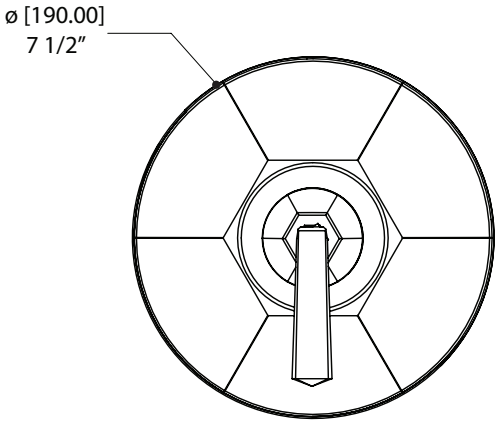


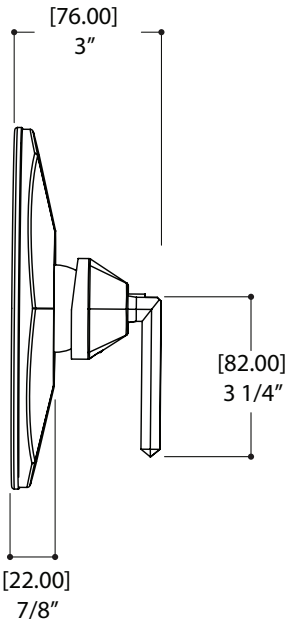


last revision : 11/08/2017

# ROUND SHOWER RAIL
# #90840

## FEATURES

31.5" stainless steel round rail with adjustable handshower support
Top pivot position adaptable (up to 29 1/2" CC)
Triple function round handshower (rain,massage,mist)
5` double interlock flexible hose, anti-torsion
Reduced water-efficient flow: 2 gpm (7.5 L/min)

## FINISH

Polished chrome (pc)

## WARRANTY

limited lifetime warranty on the polished chrome finish. All other components and parts carry a limited five-year warranty.

## CODE & COMPLIANCE

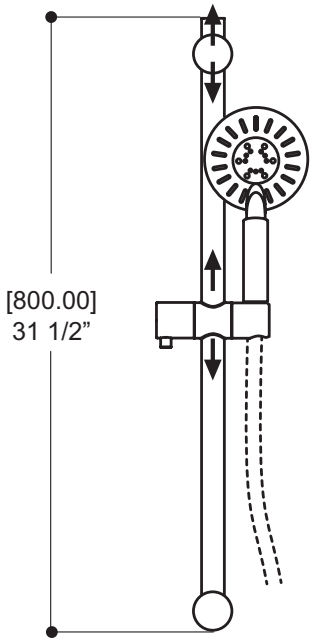


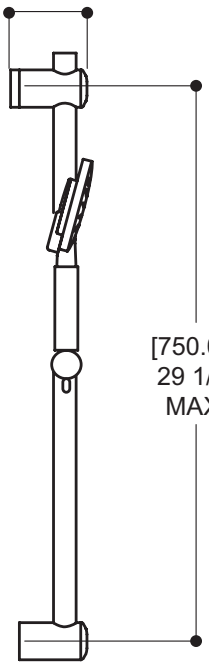


last revision : 28/07/2017

# ADJUSTABLE WATERWAY
# #90734

## FEATURES

Innovative 5/8" trim adjustment system to elbow installation
1/2" female water inlet - NPT

## FINISH

Polished chrome (pc)

## WARRANTY

limited lifetime warranty on the polished chrome finish. All other components and parts carry a limited five-year warranty.

## CODE & COMPLIANCE

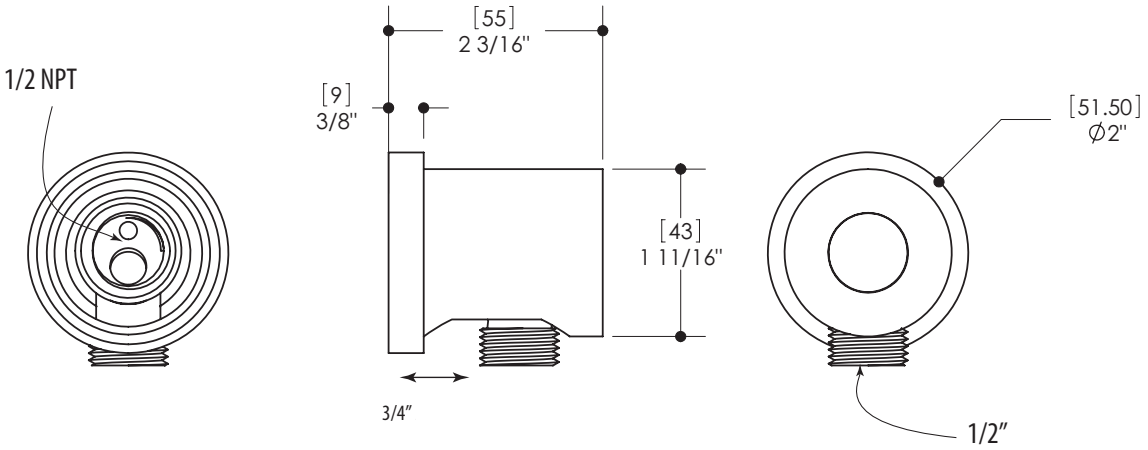


last revision : 28/07/2017